GROVE®

GMK5120L

Product Guide

ASME B30.5 Imperial 85%

130 USt (120 t)

216.5 ft (66 m)

GVW 132,280 lbs (60 000 kg)

max 295 ft (90 m)

GROVE GMK5120L

THE "MUST-HAVE"

The 'must-have' addition to every fleet. With a 217 ft (66 m) main boom, the GMK5120L perfectly fills the gap between 115 USt – 175 USt (100 t – 150 t) all-terrain cranes. Superior taxi charts and class-leading amount of counterweight results in greater flexibility and lower transportation costs.

Innovative Single Engine Concept

The single engine concept on the GMK5120L with the latest EUROMOT 5/Tier 4 final engine reduces fuel consumption to a minimum. Using the ECO mode, the GMK5120L is the most fuel efficient crane in its class. Approved for HVO – up to 90 % CO2 reduction.

Convenient transportation logistics

Counterweight configurations enable setup from 0.9 USt (0,8 t) counterweight to taxi configurations of 13 USt (12 t) to 18 USt (16,5 t) per axle. This results in greater roadability and transport savings.

Latest Gen Cab

The full vision cab was designed with operator comfort, visibility, and productivity in mind. Standard features include 20 degree cab tilt, dual CCS displays, ergonomically friendly jog dial for operating system control, radio with Bluetooth, and adjustable comfort seat.

GROVE® CONNECT™

GROVE CONNECT transforms the user experience of crane owners and makes everyday work easier.

Get access to secure, accurate data with an easy and intuitive remote 'real time' view on the GMK5120L's operation.

Scan to learn more or visit manitowoc.com/support.

Superior strength and reach

Get impressive strength and reach including 130 USt (120 t) lifting capacity with 217 ft (66 m) boom. The boom can be further extended with an 32 ft / 52 ft (9,7 m / 16 m) swingaway and one 26 ft (8 m) boom extension for a maximum length of 78.7 ft (24 m) with up to 40° offset.

The world's most advanced crane service and support network

WORLDWIDE SUPPORT NETWORK

Manitowoc's customer service extends beyond any borders. Our locations span the globe, covering five continents. No matter where the job takes you, you have a business partner nearby.

PARTS

Locating the correct part quickly is vital to managing your operations. With Manitowoc Customer Support, the parts you need are just a phone call or click away.

LIFT SOLUTIONS

The Manitowoc Crane Lift Solutions Team is dedicated to helping customers with unique and customized applications for their Manitowoc cranes, regardless of product line.

TRAINING

Manitowoc Training Centers offer courses for operators and technicians across the globe to provide in-depth instruction on crane operation, maintenance, and troubleshooting procedures.

EnCORE

Manitowoc's EnCORE program maximizes your investment by rebuilding or repairing your crane to extend its life significantly. EnCORE also includes remanufactured parts.

MANITOWOC FINANCE

Manitowoc Finance gets you in the field with the right equipment by giving you access to flexible, affordable financing. With Manitowoc Finance, equipment can be acquired with virtually no cash outlay, and unlike traditional lending, our financial products don't affect bank lines of credit. Your capital resources remain intact for times when you need ready access to cash.

Competitive rates with flexible financing options and payment schedules put you in control.

Did you know? Manitowoc Finance can finance **used** Manitowoc cranes. You can also **trade-in** your used fleet for upgrade and get financed by Manitowoc Finance.
We're here for you.

GROVE
GROVE
GROVE

CONTENTS

8
Dimensions

16
Data

17
Weights

18
Working Range / Load Charts — Main Boom

24
Working Range / Load Charts — Main Boom with Bi-Fold Swingaway

27
Working Range / Load Charts — Swingaway with Boom Insert

29
Specifications

31
Symbols glossary

DIMENSIONS

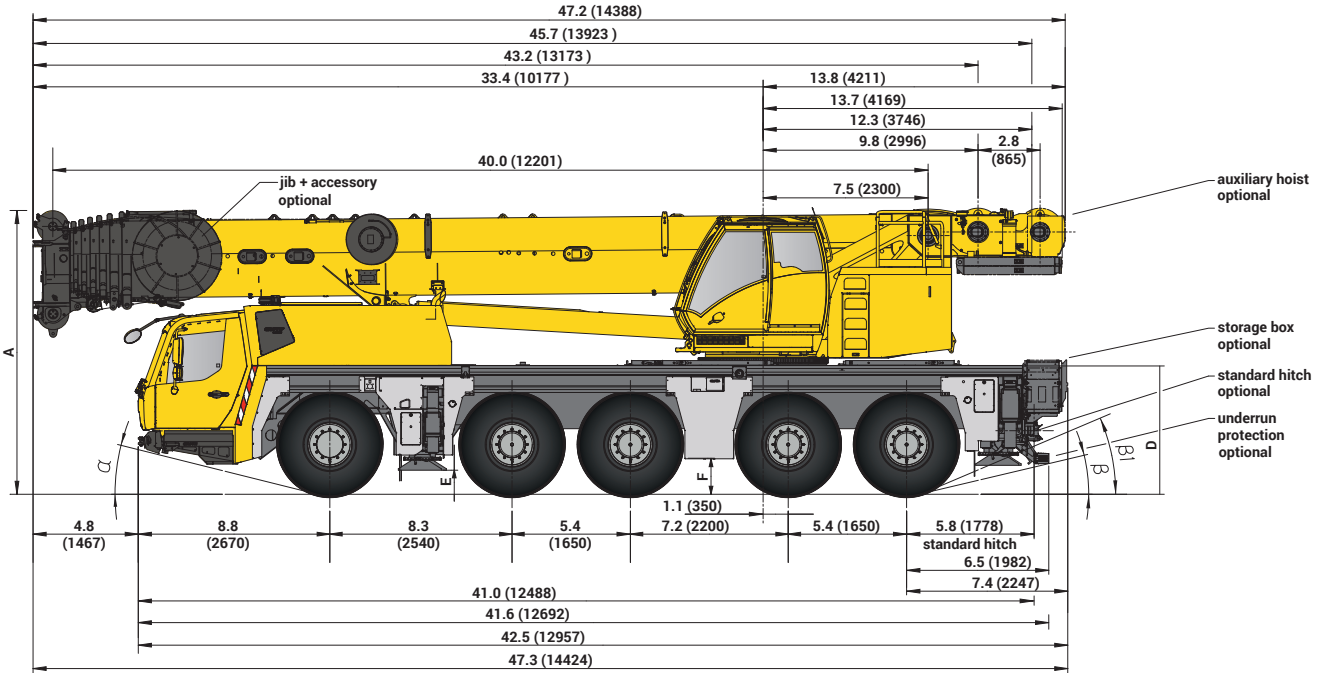

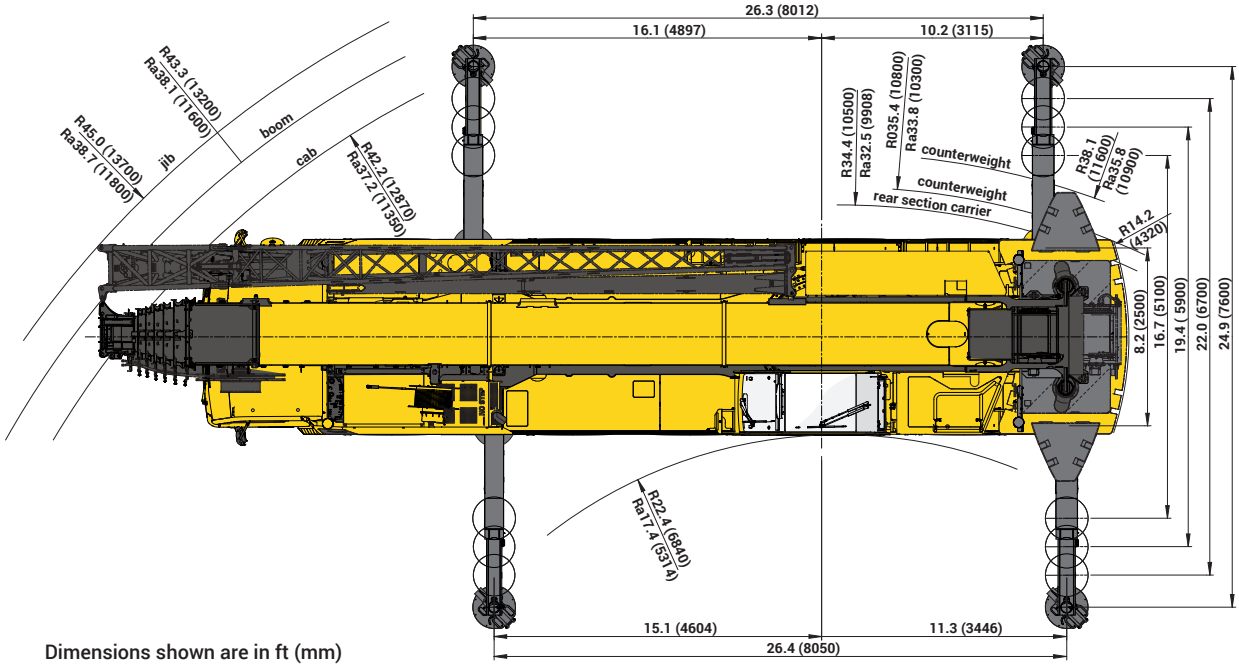

Dimensions shown are in ft (mm)

Ra = Radius all wheels steered.

	A	A* 0.33 (101 mm)**	B	C	D	E	F	α	β	β¹
R25/R14,00	12.9 (3948)	12.6 (3847)	9.0 (2750)	7.6 (2332)	5.7 (1745)	0.9 (285)	1.5 (444)	12°	11.5°	20.5°
R25/R16,00	13.1 (3998)	12.8 (3897)	9.0 (2750)	7.5 (2293)	5.9 (1795)	1.09(335)	1.6 (494)	14°	13.5°	23°
R25/R20,50	13.1 (3998)	12.8 (3897)	9.5 (2900)	7.5 (2289)	5.9 (1795)	1.09(335)	1.6 (494)	14°	13.3°	23°

* Lowered

DIMENSIONS

Standard Counterweight

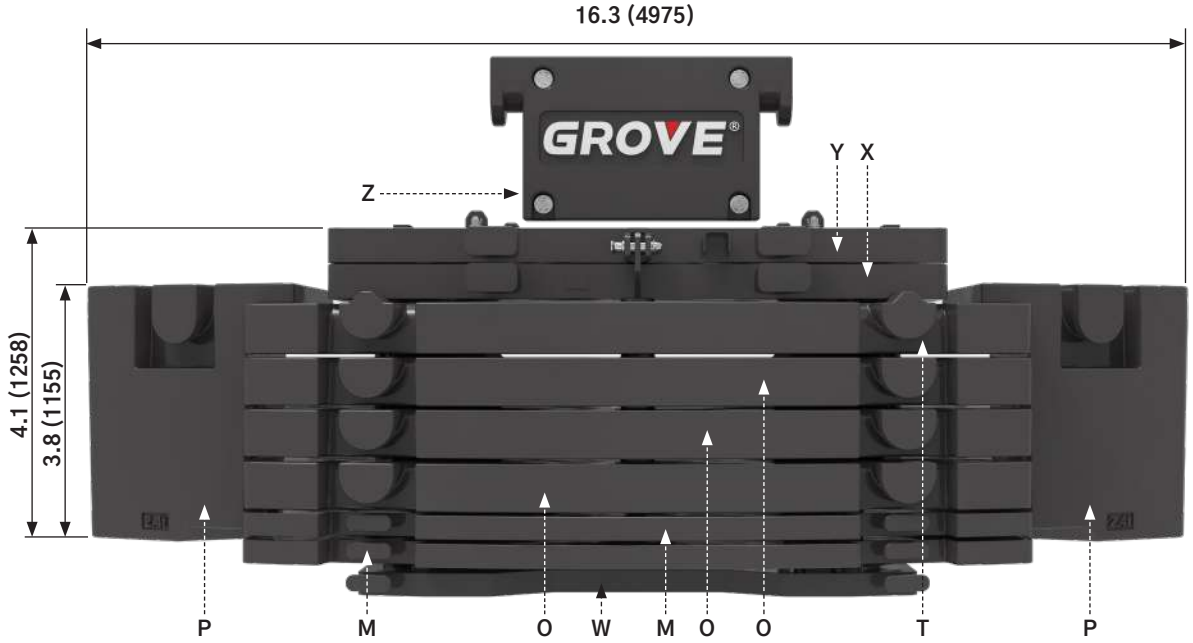

	Z 1,800 lb (0,8 t)	Y 5,100 lb (2,3 t)	X 5,100 lb (2,3 t)	w 5,100 lb (2,3 t)	M 5,100 lb (2,3 t)	T 10,141 lb (4,6 t)	O 10,141 lb (4,6 t)	P 5,300 lb (2,4 t)
1,800 lb (0,8 t)	x							
6,800 lb (3,1 t)	x	x						
6,800 lb (3,1 t)	x			x				
12,000 lb (5,4 t)	x	x	x					
12,000 lb (5,4 t)	x			x	x			
17,000 lb (7,7 t)	x	x	x	x				
17,000 lb (7,7 t)	x			x	2x			
22,100 lb (10,0 t)	x	x	x	x	x			
22,100 lb (10,0 t)	x			x	x		x	
27,000 lb (12,3 t)	x	x	x	x	2x			
27,000 lb (12,3 t)	x			x	2x		x	
32,000 lb (14,6 t)	x	x	x	x	x		x	
32,000 lb (14,6 t)	x			x	x		2x	
37,000 lb (16,9 t)	x	x	x	x			2x	
37,000 lb (16,9 t)	x			x	2x		2x	
42,000 lb (19,2 t)	x	x	x	x	x		2x	
42,000 lb (19,2 t)	x			x	x		3x	
47,400 lb (21,5 t)	x	x	x	x			3x	
47,400 lb (21,5 t)	x			x	2x		3x	
52,500 lb (23,8 t)	x	x	x	x	x		3x	
52,500 lb (23,8 t)	x			x	x	x	3x	
57,500 lb (26,1 t)	x	x	x	x	2x		3x	
57,500 lb (26,1 t)	x			x	2x	x	3x	
68,000 lb (30,7 t)	x	x	x	x	2x	x	3x	
78,000 lb (35,5 t)	x	x	x	x	2x	x	3x	2x

DIMENSIONS

Heavy Roadable Counterweight

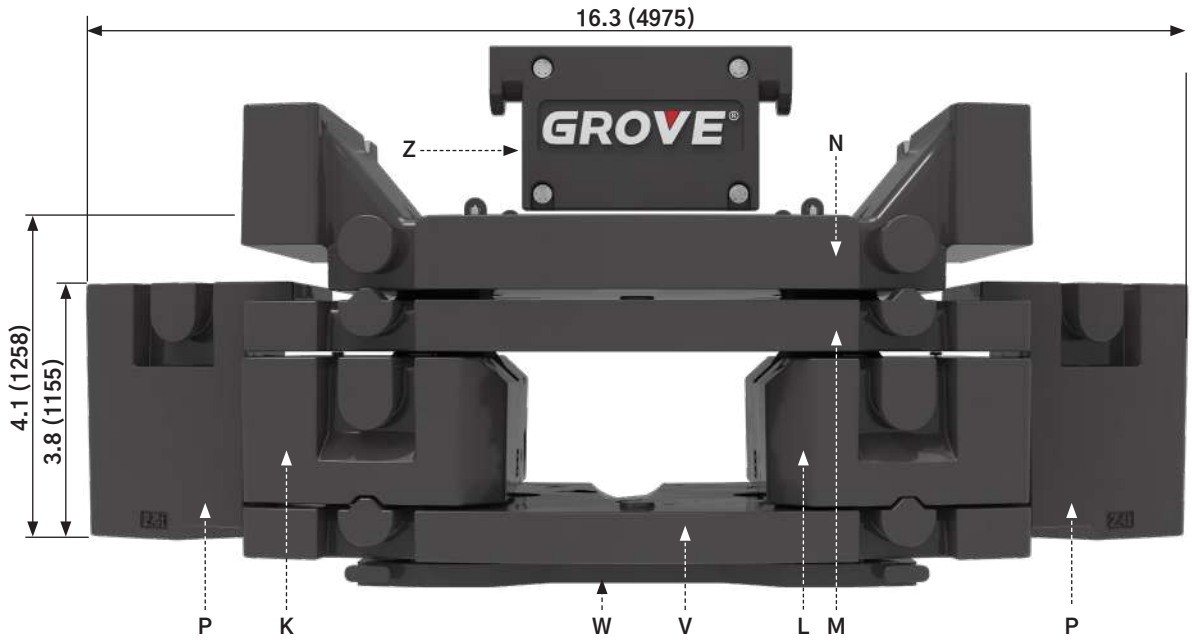

	Z 1,800 lb (0,8 t)	W 5,100 lb (2,3 t)	V 5,100 lb (2,3 t)	K 10,141 lb (4,6 t)	L 10,141 lb (4,6 t)	M 15,212 lb (6,9 t)	N* 20,283 lb (9,2 t)	P 5,300 lb (2,4 t)
1,800 lb (0,8 t)	x							
6,800 lb (3,1 t)	x	x						
12,000 lb (5,4 t)	x	x	x					
22,100 lb (10,0 t)	x	x				x		
22,100 lb (10,0 t)	x						x	
27,000 lb (12,3 t)	x	x	x			x		
27,000 lb (12,3 t)	x	x					x	
32,000 lb (14,6 t)	x	x	x				x	
42,000 lb (19,2 t)	x	x				x	x	
47,400 lb (21,5 t)	x	x	x			x	x	
52,500 lb (23,8 t)	x	x	x	x	x		x	
68,000 lb (30,7 t)	x	x	x	x	x	x	x	
78,000 lb (35,5 t)	x	x	x	x	x	x	x	2x

* Fixed to superstructure, removable with tools only.

DIMENSIONS

Counterweight

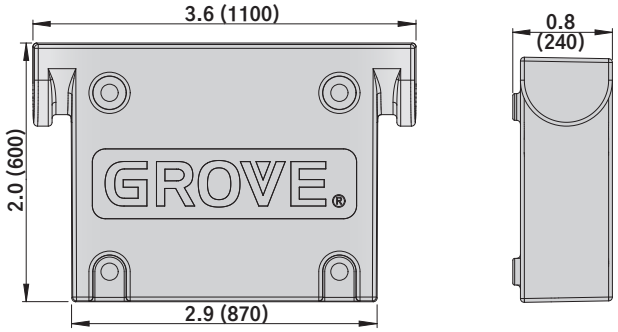

Plate	L x W x H – ft (m)	lb (kg)
Z	2′ x .8″ x 2′ (1,10 x 0,24 x 0,60)	1763 (800)

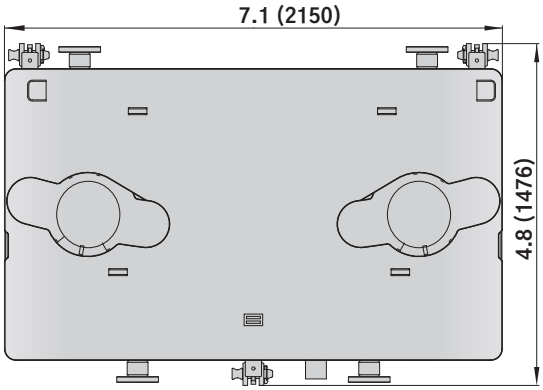

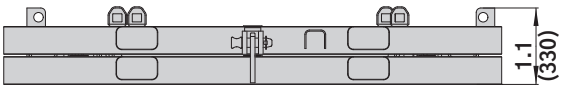

Plate	L x W x H – ft (m)	lb (kg)
Y & X	7′ x 4.8′ x 1.1′ (2,15 x 1,48 x 0,33)	5071 (2300)

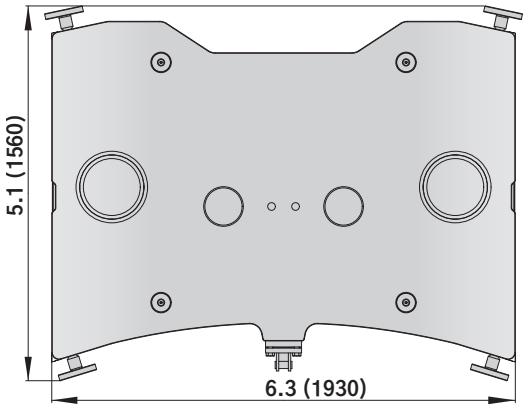

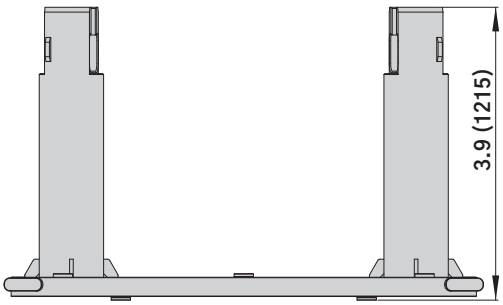

Plate	L x W x H – ft (m)	lb (kg)
W	6.3′x 5.1′x 3.9′ (1,93 x 1,56 x 1,20)	5071 (2300)

DIMENSIONS

Counterweight

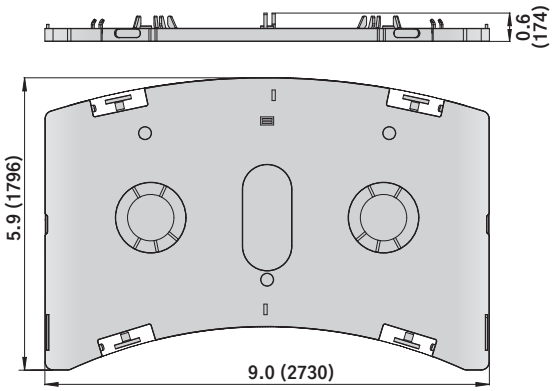

Plate	L x W x H – ft (m)	lb (kg)
V	9′ x 5.9′ x .6″ (2,73 x 1,80 x 0,17)	5071 (2300)

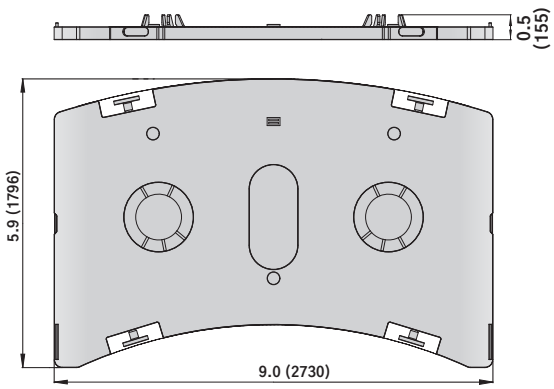

Plate	L x W x H – ft (m)	lb (kg)
U	9′ x 5.9′ x .5″ (2,73 x 1,80 x 0,16)	5071 (2300)

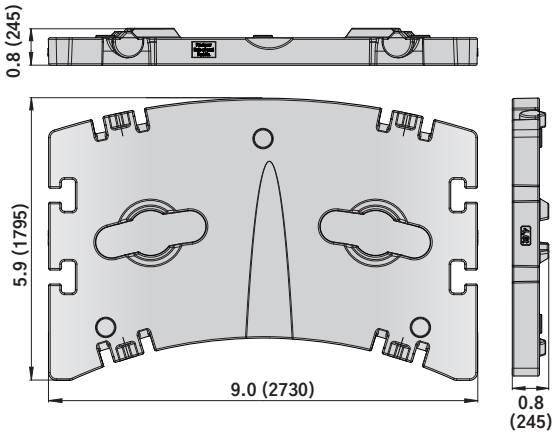

Plate	L x W x H – ft (m)	lb (kg)
T	9′ x 5.9′ x .8″ (2,73 x 1,80 x 0,25)	10,141 (4600)

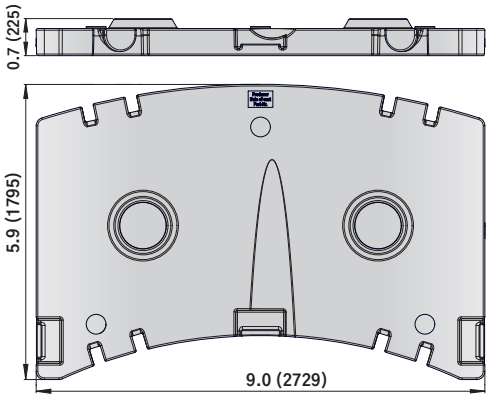

Plate	L x W x H – ft (m)	lb (kg)
O	9′ x 5.9′ x .7″ (2,73 x 1,80 x 0,23)	10,141 (4600)

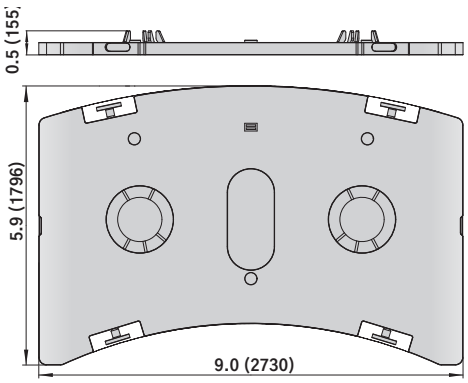

Plate	L x W x H – ft (m)	lb (kg)
M	9′ x 5.9′ x .5″ (2,73 x 1,80 x 0,16)	5071 (2300)

DIMENSIONS

Counterweight

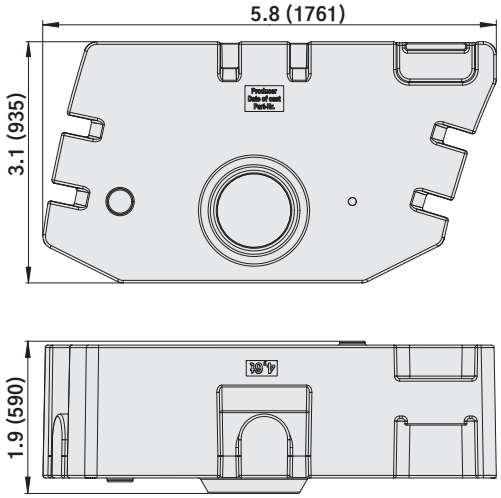

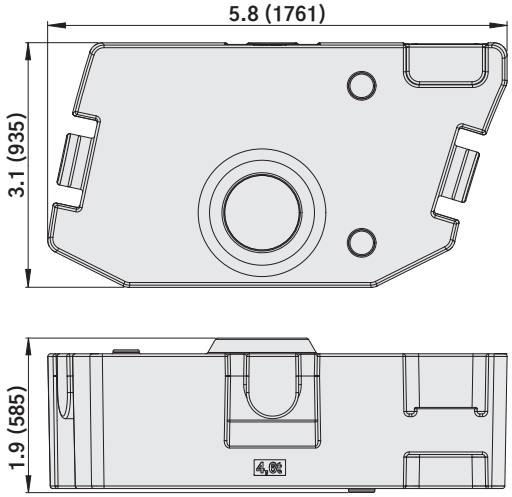

Plate	L x W x H – ft (m)	lb (kg)
S	5.8′ x 3.1′ x 1.9′ (1,76 x 0,94 x 0,59)	10141 (4600)

Plate	L x W x H – ft (m)	lb (kg)
R	5.8′ x 3.1′ x 1.9′ (1,76 x 0,93 x 0,59)	10,141 (4600)

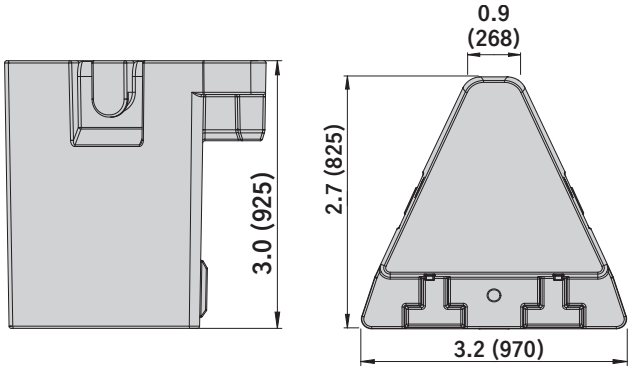

Plate	L x W x H – ft (m)	lb (kg)
P	3.2′ x 2.7′ x 3′ (0,97 x 0,83 x 0,93)	5291 (2400)

DIMENSIONS

Hose Reel

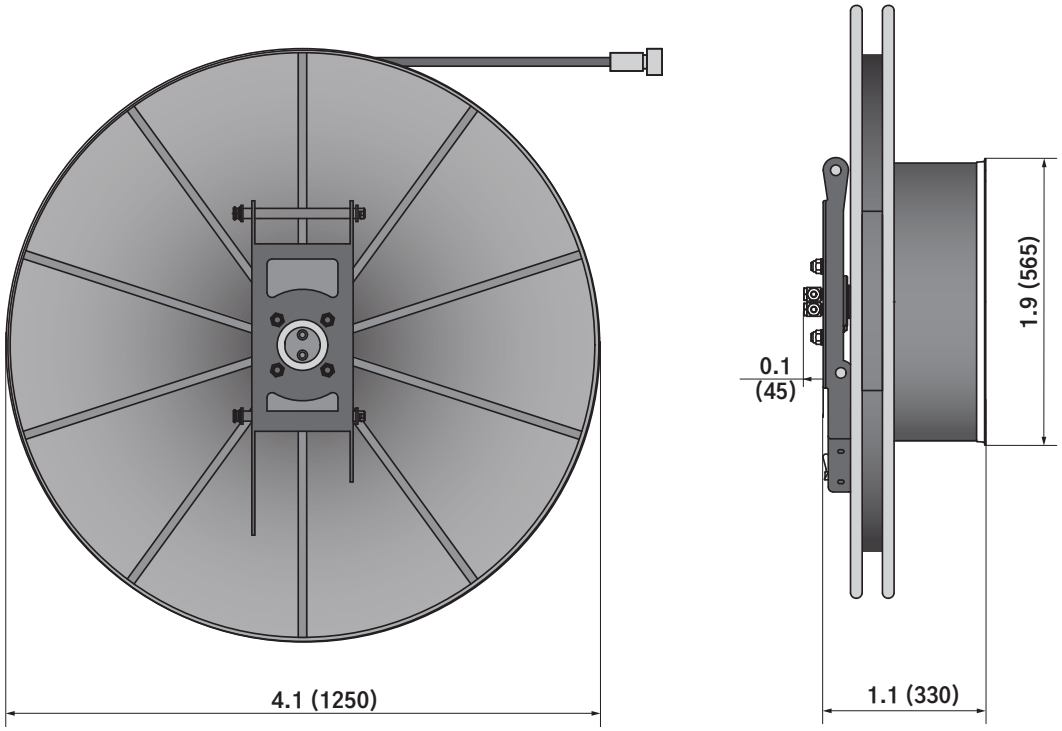

lb (kg)	408 (185)

DIMENSIONS

Jib Combinations

	L x W x H – ft (m)	lb (kg)
A	10.3′ x 2.6′ x 4′ (3,1 x 0,8 x 1,2)	1607 (729)
B	23.6′ x 2.3′ x 1.0 x 3.3′ (7,2 x 0,7 x 1,0)	970 (440)
C	21.7′ x 1.5′ x 2.3′ (6,6 x 0,4 x 0,7)	703 (319)
E	26.6′ x 2.6′ x 3.6′ (8,1 x 0,8 x 1,1)	1305 (592)

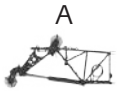

10.8 ft (3,3 m)

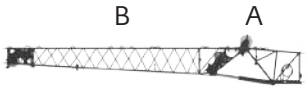

30.8 ft (9,4 m)

52.5 ft (16,0 m)

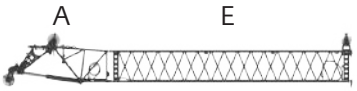

37.0 ft (11,3 m)

57.1 ft (17,4 m)

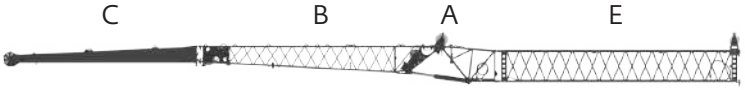

78.7 ft (24,0 m)

DATA

Lifting capacity	Sheaves	Weight	Parts of line	Possible load with crane*
110 USt (100 t)	7	2976 lb (1350 kg)	2–15	99 USt (90 t)*
88 USt (80 t)	5	2646 lb (1200 kg)	2–11	85 USt (77 t)
66 USt (60 t)	3	1543 lb (700 kg)	1–7	54 USt (49 t)
55 USt (50 t)	3	1984 lb (900 kg)	1–7	54 USt (49 t)
28 USt (26 t)	1	882 lb (400 kg)	1–3	23 USt (21 t)
10 USt (9 t)	H/B	661 lb (300 kg)	1	8 USt (7 t)

	1	2	3	4	5	6	7	8	9	10	11	12	13	14	15	16	R1	R2	
mph	4.0	4.7	5.8	7.0	8.8	10.5	12.4	15.5	17.4	21.1	25.5	31.1	38.5	46.6	52.8	52.8	4.0	4.8	
mph	1.8	2.2	2.6	3.2	4.0	4.7	5.6	6.8	8.1	9.3	11.8	14.3	17.4	21.1	25.5	30.4	1.8	2.2	70%
	14.00 R25																		

	Infinitely variable		Rope	Max. single line pull
	0 – 120 m/min	Single line (0–394 f/min)	19 mm/255 m (19 mm / 836 ft)	70,6 kN (15,872 lb)
	0 – 120 m/min	Single line (0–394 f/min)	19 mm/255 m (19 mm / 836 ft)	70,6 kN (15,872 lb)
	0 – 1,5 min^{-1}			
	–1,5° to + 83°	approx. 50 s		
	12,2 to 66,0 m	approx. 550 s (40.0 to 216.5 ft)		

WEIGHTS

Boom Over Front

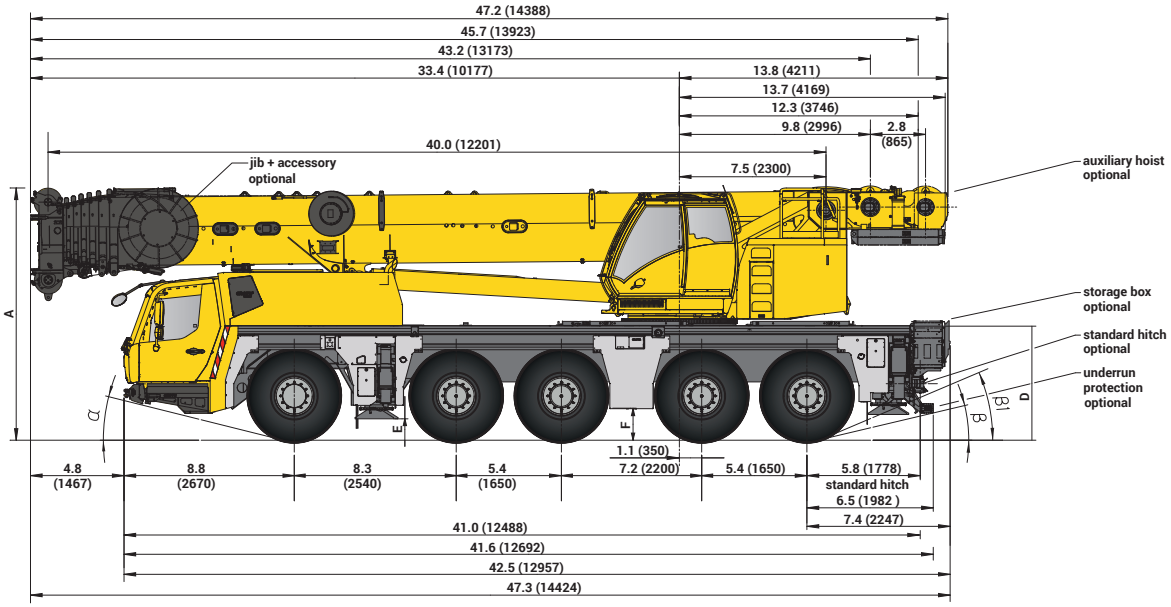

Basic Weights	Axles 1 and 2		Axles 3–5		Total	
GMK5120L typical configuration: 20.5″ tires on steel, 10x6x10 drive/steer, hydraulic luffing jib, 2nd oil cooler, outrigger pads, auxiliary hoist, driver and tanks filled, single sheave hook block on bumper, 10,100 lb (4,6 t) cwt installed on turntable, 10,100 lb (4,6t) cwt installed on carrier deck	52,340 lb	23 740 kg	76,050 lb	34 500 kg	128,380 lb	58 230 kg

Trailing Boom

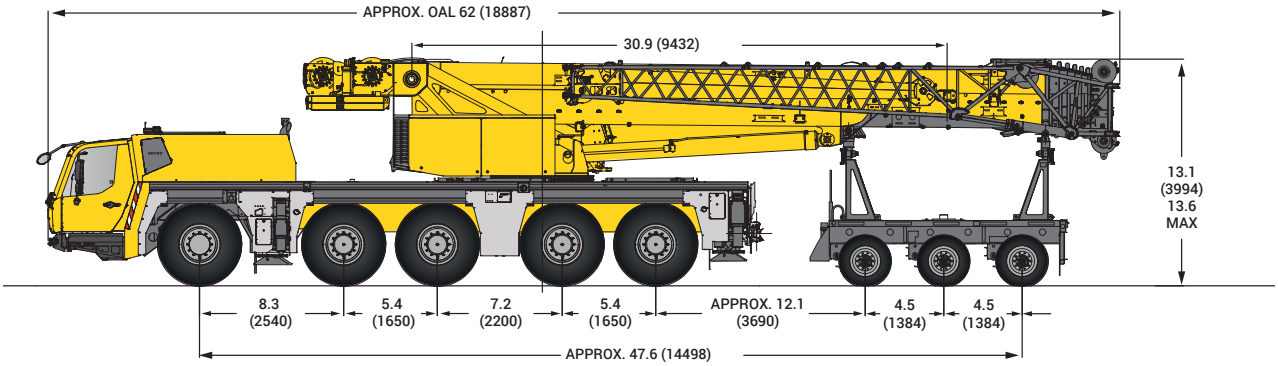

Basic Weights	Axles 1 and 2		Axles 3–5		3 Dolly Axles		Total	
GMK5120L typical configuration: 20.5″ tires on steel, 10x6x10 drive/steer, hydraulic luffing swingaway, 2nd oil cooler, outrigger pads, auxiliary hoist, driver and tanks filled, 3 axle boom dolly (4300 kg [9300 lb]), Boom telescoped out 1 m (3.3 ft)	39,200 lb	17 800 kg	46,100 lb	20 900 kg	33,000 lb	15 000 kg	118,350 lb	53 680 kg

WORKING RANGE

Working Range - Main Boom

40.0 ft – 216.5 ft
(12,2 m – 66,0 m)

78,260 lb
(35,5 t)

24.9 ft
(7,6 m)

360°

(Boom deflection not shown)

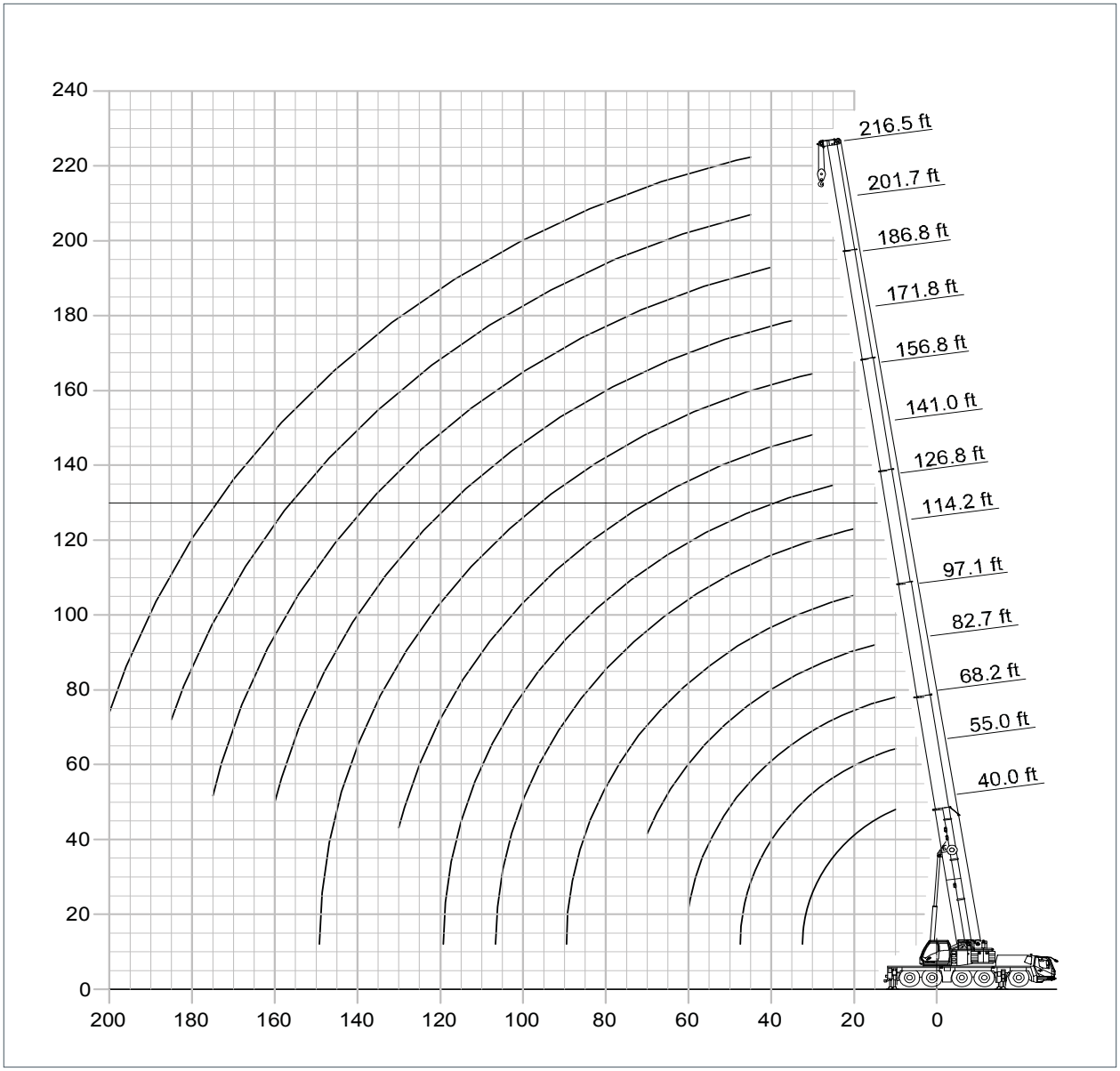

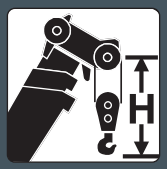

Hook block USt (t)	H ft (mm)
154 D (140)	10.4 (3160)
105 D (95)	10.1 (3070)
105 D (95)	9.8 (3000)
29 E (26)	9.1 (2770)
10 H/B (9)	7.7 (2350)

THIS CHART IS ONLY A GUIDE AND SHOULD NOT BE USED TO OPERATE THE CRANE.
The individual crane's load chart, operating instructions and other instructional plates must be read and understood prior to operating the crane

LOAD CHART
Main Boom

40.0 ft – 216.5 ft (12,2 m – 66,0 m)

78,260 lb (35,5 t)

24.9 ft (7,6 m)

360°

Pounds

Feet	40.0	55.0	69.9	84.9	99.7	114.2	128.3	141.0	153.8	165.9	179.3	191.6	203.7	210.0	216.5
10	188.0	170.0	164.0												
15	157.0	142.0	134.0	128.0											
20	123.0	121.0	113.0	106.0	95.0	76.0									
25	96.0	97.0	97.0	92.0	89.0	74.0	59.0								
30	78.0	79.0	79.0	78.0	78.0	69.0	58.0	46.0	38.0						
35		67.0	66.0	65.0	66.0	63.0	54.0	45.0	38.0	32.0	25.0				
40		57.0	56.0	57.0	57.0	57.0	50.0	41.6	37.2	32.0	25.0	21.0			
45		50.0	50.0	50.0	49.0	50.0	47.0	38.0	34.8	31.4	25.0	21.0	17.8	15.2	14.0
50			44.0	43.6	43.2	44.0	43.4	34.8	32.2	29.8	25.0	21.0	17.8	15.2	14.0
55			39.0	38.6	39.6	39.0	40.2	31.8	29.6	28.2	24.4	21.0	17.8	15.2	14.0
60			34.8	34.4	35.6	34.8	36.0	29.0	27.2	26.4	23.0	21.0	17.8	15.0	13.8
65				31.2	32.0	31.6	32.4	26.6	25.2	24.6	21.8	20.0	17.8	15.0	13.6
70				28.8	28.8	29.4	29.2	24.6	23.2	23.0	20.6	19.0	17.6	14.8	13.6
75				26.0	26.2	27.2	26.4	22.6	21.6	21.4	19.4	18.2	17.0	14.6	13.4
80					23.8	25.0	24.0	21.0	20.0	20.0	18.2	17.2	16.2	14.4	13.0
85					21.8	22.8	22.0	19.4	18.6	18.6	17.2	16.2	15.0	14.2	12.8
90					16.6	21.0	20.2	18.0	17.0	17.4	16.0	15.0	14.4	13.6	12.2
95						19.4	18.4	16.8	15.8	16.2	14.8	14.2	13.6	13.0	11.4
100						18.0	17.0	15.6	14.4	15.0	13.8	13.4	13.0	12.6	10.8
105						13.4	15.4	14.4	13.6	13.8	13.0	12.6	12.2	12.0	10.0
110							14.0	13.0	12.6	12.8	12.0	12.0	11.6	11.4	9.6
115							12.8	11.8	11.4	12.0	11.4	11.4	11.0	10.8	9.0
120							4.6	10.6	10.4	11.2	10.6	10.6	10.6	10.2	8.4
125								9.6	9.2	10.6	9.8	10.0	10.0	9.8	7.8
130								8.6	8.4	10.2	9.0	9.4	9.6	9.4	7.4
135									7.4	9.8	8.0	8.6	9.0	8.8	6.8
140									6.6	9.4	7.2	8.0	8.4	8.4	6.4
145										8.8	6.8	7.6	7.6	7.8	6.0
150										8.2	6.4	7.2	6.8	7.0	5.6
155										5.4	6.0	6.8	6.2	6.4	5.2
160											5.8	6.4	5.6	5.8	4.8
165											5.4	5.8	5.0	5.2	4.6
170											2.4	5.2	4.4	4.6	4.2
175													4.0	4.2	4.0
180													3.4	3.6	3.6
185													3.0	3.2	3.2
190													2.6	2.8	2.8
195														2.4	2.4
200															2.0

THIS CHART IS ONLY A GUIDE AND SHOULD NOT BE USED TO OPERATE THE CRANE.
The individual crane's load chart, operating instructions and other instructional plates must be read and understood prior to operating the crane

LOAD CHART
Main Boom

40.0 ft – 216.5 ft (12,2 m – 66,0 m)

67,700 lb (30,7 t)

24.9 ft (7,6 m)

360°

Pounds

Feet	40.0	55.0	69.9	84.9	99.7	114.2	128.3	141.0	153.8	165.9	179.3	191.6	203.7	210.0	216.5
10	188.0	172.0	164.0												
15	157.0	142.0	134.0	128.0											
20	119.0	119.0	113.0	106.0	95.0	76.0									
25	93.0	94.0	94.0	92.0	89.0	74.0	59.0								
30	75.0	77.0	76.0	75.0	76.0	69.0	58.0	46.0	38.0						
35		65.0	64.0	65.0	64.0	63.0	54.0	45.0	38.0	32.0	25.0				
40		55.0	56.0	55.0	54.0	56.0	50.0	41.6	37.2	32.0	25.0	21.0			
45		48.0	48.0	48.0	47.0	48.0	47.0	38.0	34.8	31.4	25.0	21.0	17.8	15.2	14.0
50			42.2	41.8	43.2	42.4	43.4	34.8	32.2	29.8	25.0	21.0	17.8	15.2	14.0
55			37.2	36.8	38.0	37.2	38.4	31.8	29.6	28.2	24.4	21.0	17.8	15.2	14.0
60			33.0	33.6	33.8	34.2	34.2	29.0	27.2	26.4	23.0	21.0	17.8	15.0	13.8
65				30.8	30.4	31.4	30.6	26.6	25.2	24.6	21.8	20.0	17.8	15.0	13.6
70				27.8	27.2	28.4	27.6	24.6	23.2	23.0	20.6	19.0	17.6	14.8	13.6
75				25.2	24.8	25.8	25.0	22.6	21.6	21.4	19.4	18.2	17.0	14.6	13.4
80					22.2	23.6	22.6	21.0	20.0	20.0	18.2	17.2	16.2	14.4	13.0
85					19.8	21.4	20.2	19.2	18.6	18.6	17.2	16.2	15.0	14.2	12.8
90					15.0	19.2	18.0	17.2	16.8	17.4	16.0	15.0	14.4	13.6	12.2
95						17.4	16.2	15.2	15.0	16.0	14.8	14.2	13.6	13.0	11.4
100						15.8	14.6	13.6	13.4	14.2	13.8	13.4	13.0	12.6	10.8
105						13.4	13.2	12.2	12.0	12.8	12.6	12.6	12.2	12.0	10.0
110							11.8	10.8	10.6	12.0	11.4	11.8	11.6	11.4	9.6
115							10.6	9.6	9.4	11.6	10.0	10.6	11.0	10.8	9.0
120							4.6	8.6	8.4	11.0	9.0	10.0	10.2	10.2	8.4
125								7.6	7.4	10.4	8.6	9.4	9.2	9.4	7.8
130								6.8	6.4	9.6	8.0	9.0	8.2	8.6	7.4
135									5.6	8.8	7.6	8.2	7.4	7.6	6.8
140									5.0	8.0	7.2	7.4	6.6	6.8	6.4
145										7.2	6.8	6.8	6.0	6.2	6.0
150										6.6	6.4	6.0	5.8	5.6	5.6
155											6.0	5.4	5.4	4.8	4.8
160											5.6	4.8	5.0	4.4	4.4
165											5.0	4.4	4.4	3.8	3.8
170												3.8	4.0	3.2	3.2
175												2.0	3.4	2.8	2.8
180													3.0	2.4	2.4
185													2.6	2.0	1.8
190														1.6	1.4

THIS CHART IS ONLY A GUIDE AND SHOULD NOT BE USED TO OPERATE THE CRANE.
The individual crane's load chart, operating instructions and other instructional plates must be read and understood prior to operating the crane

LOAD CHART
Main Boom

40.0 ft – 216.5 ft (12,2 m – 66,0 m)

57,500 lb (26,1 t)

24.9 ft (7,6 m)

360°

Pounds

Feet	40.0	55.0	69.9	84.9	99.7	114.2	128.3	141.0	153.8	165.9	179.3	191.6	203.7	210.0	216.5
10	188.0	172.0	164.0												
15	157.0	142.0	134.0	128.0											
20	115.0	115.0	113.0	106.0	95.0	76.0									
25	90.0	90.0	90.0	90.0	89.0	74.0	59.0								
30	73.0	74.0	73.0	74.0	74.0	69.0	58.0	46.0	38.0						
35		62.0	63.0	62.0	62.0	63.0	54.0	45.0	38.0	32.0	25.0				
40		53.0	53.0	53.0	53.0	54.0	50.0	41.6	37.2	32.0	25.0	21.0			
45		46.0	46.0	46.0	47.0	46.0	47.0	38.0	34.8	31.4	25.0	21.0	17.8	15.2	14.0
50			40.2	39.8	41.0	40.2	41.2	34.8	32.2	29.8	25.0	21.0	17.8	15.2	14.0
55			35.4	36.2	36.2	36.8	36.2	31.8	29.6	28.2	24.4	21.0	17.8	15.2	14.0
60			31.2	32.6	32.2	33.2	31.8	29.0	27.2	26.4	23.0	21.0	17.8	15.0	13.8
65				28.8	28.2	29.8	28.2	26.6	25.2	24.6	21.8	20.0	17.8	15.0	13.6
70				25.2	24.6	26.2	25.0	23.6	22.8	23.0	20.6	19.0	17.6	14.8	13.6
75				22.6	21.6	23.2	22.0	21.0	20.2	20.8	19.4	18.2	17.0	14.6	13.4
80					19.2	20.8	19.6	18.6	18.2	18.6	18.0	17.2	16.2	14.4	13.0
85					17.0	18.6	17.4	16.4	16.2	16.8	16.2	16.2	15.0	14.2	12.8
90					14.6	16.6	15.4	14.4	14.2	15.2	14.6	14.8	14.4	13.6	12.2
95					4.4	14.8	13.8	12.8	12.6	13.8	13.2	13.4	13.6	13.0	11.4
100						13.4	12.2	11.2	11.0	13.2	11.8	12.4	12.6	12.6	10.8
105						12.2	10.8	10.0	9.6	12.6	10.8	11.8	11.4	11.4	10.0
110							9.6	8.8	8.4	11.6	10.2	11.0	10.4	10.4	9.6
115							8.6	7.6	7.4	10.6	9.6	10.0	9.2	9.4	9.0
120							4.6	6.6	6.4	9.6	9.0	9.0	8.2	8.4	8.4
125								5.8	5.6	8.6	8.6	8.2	7.6	7.6	7.6
130								5.0	4.6	7.8	8.0	7.4	7.2	6.8	6.8
135									4.0	7.0	7.2	6.6	6.6	6.0	6.0
140									3.2	6.2	6.6	5.8	6.0	5.2	5.2
145										5.6	5.8	5.2	5.2	4.6	4.6
150										5.0	5.2	4.6	4.6	4.0	4.0
155										2.4	4.8	4.0	4.2	3.4	3.4
160											4.2	3.4	3.6	2.8	2.8
165											3.8	3.0	3.0	2.4	2.4
170												2.6	2.6	2.0	2.0
175													2.2	1.6	1.4
180													1.8		

THIS CHART IS ONLY A GUIDE AND SHOULD NOT BE USED TO OPERATE THE CRANE.
The individual crane's load chart, operating instructions and other instructional plates must be read and understood prior to operating the crane

LOAD CHART

Main Boom

40.0 ft – 216.5 ft (12,2 m – 66,0 m)

22,000 lb (10,0 t)

24.9 ft (7,6 m)

360°

Pounds

Feet	40.0	55.0	69.9	84.9	99.7	114.2	128.3	141–148.2	153–156.8	165.9	179.3	191.6	203.7	210.0	216.5
10	188.0	170.0	164.0												
15	138.0	138.0	134.0	128.0											
20	100.0	101.0	101.0	100.0	95.0	76.0									
25	78.0	80.0	80.0	75.0	73.0	67.0	59.0								
30	58.0	61.0	61.0	60.0	56.0	55.0	51.0	46.0	38.0						
35		47.0	49.0	47.0	44.0	44.0	40.8	38.0	36.2	32.0	25.0				
40		37.6	38.8	39.2	36.0	36.4	34.0	31.2	29.8	29.8	25.0	21.0			
45		30.2	32.8	33.8	29.8	30.4	31.0	26.0	24.8	25.0	24.0	21.0	17.8	15.2	14.0
50			27.2	28.0	25.0	25.8	26.4	21.8	20.8	23.6	22.0	20.4	17.8	15.2	14.0
55			22.8	23.6	20.8	22.2	22.8	20.2	17.8	20.6	20.4	19.0	17.6	15.2	14.0
60			19.2	20.0	17.4	19.0	19.8	18.6	16.2	18.0	17.8	16.4	15.2	15.0	13.8
65				17.2	14.4	16.2	17.4	17.0	14.8	15.6	15.6	14.4	13.2	13.2	13.0
70				14.8	12.6	13.8	15.0	15.8	13.6	13.8	13.8	12.6	11.4	11.4	11.4
75				12.8	11.8	11.8	13.0	14.0	12.6	12.0	12.0	11.0	9.8	9.8	9.8
80					11.0	10.0	11.2	12.4	11.8	10.6	10.6	9.6	8.4	8.6	8.4
85					10.4	8.4	10.2	10.8	11.0	9.4	9.4	8.2	7.2	7.4	7.2
90					5.8	7.2	9.6	9.6	9.6	8.2	8.2	7.2	6.2	6.2	6.2
95						6.0	9.0	8.4	8.4	7.0	7.2	6.2	5.2	5.4	5.2
100						5.0	8.0	7.4	7.4	6.0	6.2	5.4	4.4	4.4	4.4
105						4.2	7.0	6.4	6.4	5.0	5.2	4.6	3.6	3.6	3.6
110							6.2	5.6	5.6	4.2	4.4	3.6	2.8	3.0	3.0
115							5.4	4.8	4.8	3.4	3.6	3.0	2.2	2.4	2.4
120							5.0	4.0	4.2	2.8	3.0	2.2		1.6	1.8
125								3.4	3.6	2.0	2.4	1.6			
130									3.0	1.6	1.8				
135									2.4						
140									2.0						
145									1.6						

THIS CHART IS ONLY A GUIDE AND SHOULD NOT BE USED TO OPERATE THE CRANE.
The individual crane's load chart, operating instructions and other instructional plates must be read and understood prior to operating the crane

LOAD CHART
Main Boom

40.0 ft – 216.5 ft (12,2 m – 66,0 m)

1,800 lb (0,8 t)

24.9 ft (7,6 m)

360°

Pounds

Feet	40.0	55.0	69.9	84.9	99.3	113.4	126.8	141–148.2	153–156.8	165.3	176.1	191.0	201.7	210.0	216.5
10	188.0	172.0	164.0												
15	127.0	128.0	127.0	116.0											
20	91.0	90.0	82.0	78.0	70.0	67.0									
25	55.0	61.0	59.0	56.0	50.0	49.0	43.8								
30	36.6	42.6	45.0	43.0	36.8	36.8	36.8	30.6	28.8	26.8					
35		31.2	34.0	33.8	28.4	29.0	29.4	27.2	22.4	25.6	22.8				
40		23.6	26.2	27.0	22.4	23.2	23.8	23.8	21.6	21.0	20.6	18.8			
45		18.0	21.0	22.4	19.2	19.0	19.6	19.8	19.6	17.2	17.2	15.4	15.2	14.0	13.6
50			16.8	18.8	17.4	15.4	17.6	16.6	16.4	14.2	14.2	12.6	12.4	11.2	11.0
55			13.6	15.6	15.8	12.6	15.8	14.0	13.8	11.8	11.8	10.4	10.2	9.0	9.0
60			10.8	12.8	13.4	10.2	13.4	11.8	11.8	9.6	9.6	8.4	8.2	7.2	7.2
65				10.6	11.2	8.4	11.4	10.0	10.0	8.0	8.0	6.8	6.8	5.8	5.6
70				8.8	9.4	6.6	9.8	8.4	8.4	6.4	6.6	5.4	5.4	4.4	4.4
75				7.4	8.0	5.2	8.4	7.2	7.0	5.2	5.4	4.2	4.2	3.2	3.2
80					6.6	3.8	7.2	6.0	6.0	4.2	4.2	3.2	3.2	2.2	2.2
85					5.4	2.8	6.0	5.0	5.0	3.2	3.4	2.2	2.2		
90						1.8	5.0	4.0	4.0	2.4	2.4	1.4	1.4		
95							4.0	3.2	3.4	1.6	1.8				
100							3.4	2.6	2.6						
105							2.6	1.8	2.0						
110							2.0								

THIS CHART IS ONLY A GUIDE AND SHOULD NOT BE USED TO OPERATE THE CRANE.
The individual crane's load chart, operating instructions and other instructional plates must be read and understood prior to operating the crane

WORKING RANGE

Working Range - Main Boom and Bi-Fold Swingaway

40.0 ft – 216.5 ft
(12,2 m – 66,0 m)

78,260 lb
(35,5 t)

24.9 ft
(7,6 m)

360°

(Boom deflection not shown)

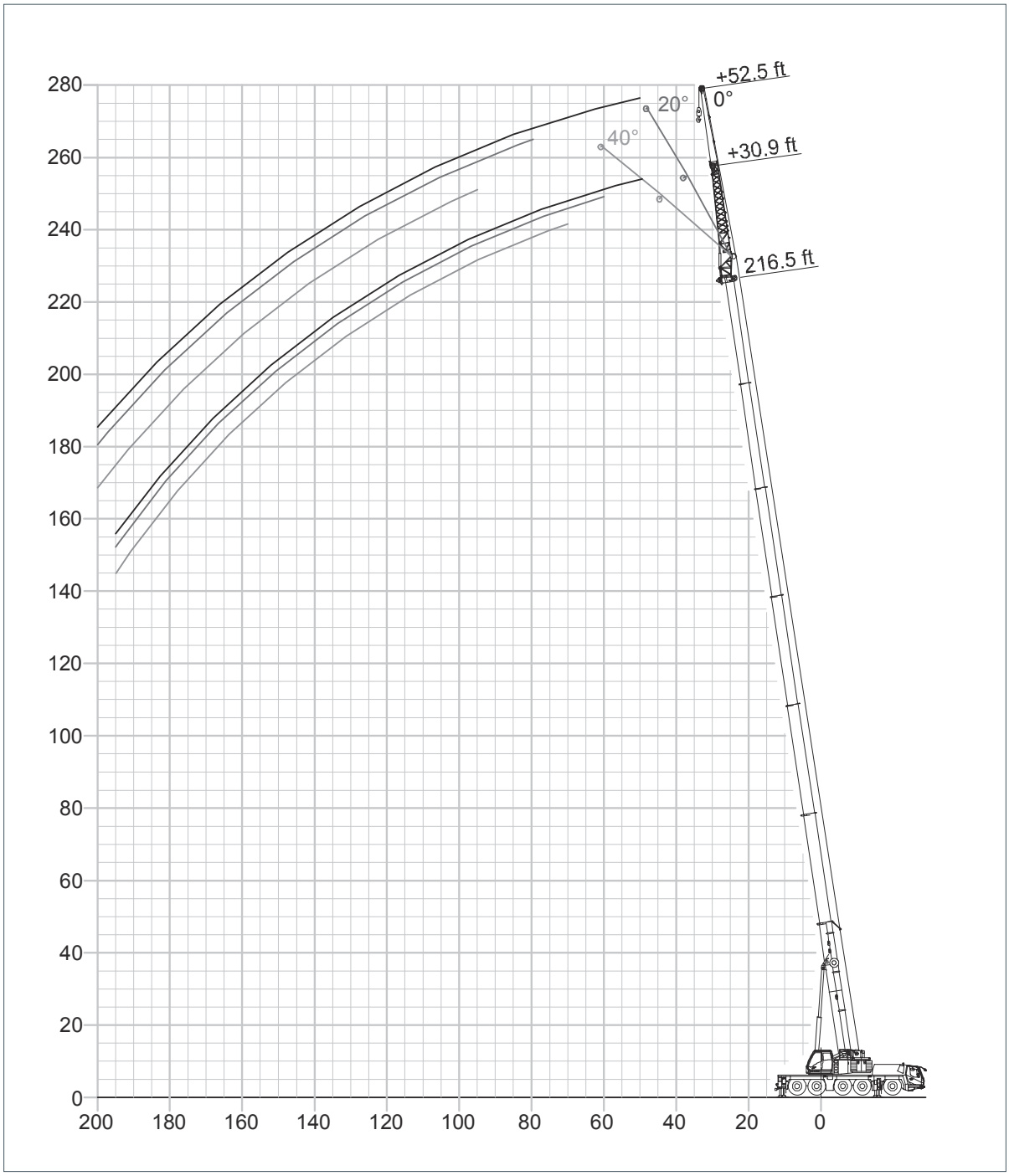

THIS CHART IS ONLY A GUIDE AND SHOULD NOT BE USED TO OPERATE THE CRANE.
The individual crane's load chart, operating instructions and other instructional plates must be read and understood prior to operating the crane

LOAD CHART

Main Boom and Bi-Fold Swingaway

128.3 ft – 216.5 ft (39 m – 66,0 m)

30.9 ft / 52.5 ft (11,2 m – 16 m)

78,200 lb (35,5 t)

24.9 ft (7,6 m)

360°

Pounds

Feet	128.3			178.1–179.3			203.7			216.5		
Feet	30.9			30.9			30.9			30.9		
	0°	* 0° – 20°	* 20° – 40°	0°	* 0° – 20°	* 20° – 40°	0°	* 0° – 20°	* 20° – 40°	0°	* 0° – 20°	* 20° – 40°
30	26.2											
35	25.6	22.0										
40	25.0	21.0	15.4	14.8								
45	24.4	20.0	15.2	14.8			9.8					
50	23.6	19.0	14.8	14.8	14.8		9.8			7.6		
55	22.4	18.0	14.6	14.8	14.8	12.2	9.8			7.6		
60	21.2	17.4	14.2	14.8	14.8	12.2	9.8	9.8		7.6	7.6	
65	20.0	16.6	13.8	14.8	14.8	12.0	9.8	9.8		7.6	7.6	
70	18.8	15.8	13.6	14.8	14.8	12.0	9.8	9.8	9.6	7.6	7.6	7.6
75	17.8	15.2	13.2	14.8	14.6	12.0	9.8	9.8	9.6	7.6	7.6	7.6
80	16.8	14.6	13.0	14.2	14.2	11.8	9.8	9.8	9.6	7.6	7.6	7.6
85	16.0	14.0	12.8	13.6	13.6	11.8	9.8	9.8	9.6	7.6	7.6	7.6
90	15.0	13.6	12.6	12.8	12.8	11.8	9.8	9.8	9.6	7.6	7.6	7.6
95	14.4	13.0	12.4	12.2	12.2	11.8	9.8	9.8	9.6	7.6	7.6	7.6
100	13.8	12.6	12.0	11.4	11.4	11.4	9.8	9.8	9.6	7.6	7.6	7.6
105	13.2	12.2	11.8	10.8	10.8	10.8	9.6	9.4	9.2	7.4	7.4	7.4
110	12.6	11.8	11.6	10.2	10.2	10.2	9.2	9.2	9.0	7.4	7.4	7.4
115	12.2	11.4	11.4	9.6	9.6	9.6	8.8	8.8	8.8	7.0	7.0	7.0
120	11.8	11.2	11.2	9.2	9.2	9.2	8.2	8.2	8.2	6.6	6.6	6.6
125	11.4	10.8		8.6	8.6	8.6	7.8	7.8	7.8	6.4	6.4	6.4
130	10.6	10.6		8.2	8.2	8.2	7.4	7.4	7.4	6.0	6.0	6.0
135	9.6	9.6		7.6	7.6	7.6	7.0	7.0	7.0	5.4	5.4	5.4
140	8.8	8.8		7.2	7.2	7.2	6.8	6.8	6.8	5.0	5.0	5.0
145				6.6	6.6	6.6	6.4	6.4	6.4	4.6	4.6	4.6
150				5.8	5.8	6.2	6.0	6.0	6.0	4.2	4.2	4.2
155				5.4	5.4	5.6	5.6	5.6	5.6	4.0	4.0	4.0
160				5.0	5.0	5.0	5.4	5.4	5.4	3.6	3.6	3.6
165				4.8	4.8	4.8	4.8	4.8	5.0	3.2	3.2	3.2
170				4.6	4.6	4.6	4.2	4.2	4.4	3.0	3.0	3.0
175				4.2	4.2		3.6	3.6	4.0	2.6	2.6	2.6
180				4.0	4.0		3.2	3.2	3.4	2.4	2.4	2.4
185				3.8	3.8		2.8	2.8	3.0	2.2	2.2	2.2
190				3.6	3.6		2.2	2.2	2.4	1.8	1.8	1.8
195							2.0	2.0		1.6	1.6	1.6
200							1.6	1.6				

THIS CHART IS ONLY A GUIDE AND SHOULD NOT BE USED TO OPERATE THE CRANE.
The individual crane's load chart, operating instructions and other instructional plates must be read and understood prior to operating the crane

LOAD CHART

Main Boom and Bi-Fold Swingaway

128.3 ft – 216.5 ft (39 m – 66,0 m)

30.9 ft / 52.5 ft (11,2 m – 16 m)

78,200 lb (35,5 t)

24.9 ft (7,6 m)

360°

Pounds

Feet	128.3			178.1–179.3			203.7			216.5		
Feet	52.5			52.5			52.5			52.5		
	0°	* 0° – 20°	* 20° – 40°	0°	* 0° – 20°	* 20° – 40°	0°	* 0° – 20°	* 20° – 40°	0°	* 0° – 20°	* 20° – 40°
30	13.4											
35	13.2											
40	13.0											
45	12.8			9.4								
50	12.6	10.2		9.4			6.4			5.2		
55	12.4	9.8		9.4			6.4			5.2		
60	12.2	9.4	7.2	9.4	8.6		6.4			5.2		
65	12.0	9.0	7.0	9.2	8.6		6.4			5.2		
70	11.8	8.8	7.0	9.2	8.4		6.4	6.4		5.2		
75	11.6	8.4	6.8	9.2	8.4	6.6	6.4	6.4		5.2		
80	11.2	8.2	6.6	9.0	8.4	6.6	6.4	6.4		5.2	5.2	
85	10.6	8.0	6.6	9.0	8.2	6.6	6.4	6.4		5.2	5.2	
90	10.2	7.8	6.4	9.0	8.2	6.6	6.4	6.4	5.4	5.2	5.2	
95	9.8	7.6	6.4	9.0	8.0	6.6	6.4	6.4	5.4	5.2	5.2	5.0
100	9.4	7.4	6.4	8.8	7.8	6.4	6.4	6.4	5.4	5.2	5.2	5.0
105	9.0	7.2	6.2	8.8	7.6	6.4	6.4	6.4	5.4	5.2	5.2	4.8
110	8.6	7.0	6.2	8.8	7.4	6.4	6.4	6.4	5.4	5.2	5.2	4.8
115	8.4	6.8	6.2	8.6	7.4	6.2	6.4	6.4	5.4	5.2	5.2	4.8
120	8.0	6.6	6.0	8.6	7.2	6.2	6.4	6.4	5.4	5.2	5.2	4.8
125	7.8	6.6	6.0	8.2	7.0	6.2	6.4	6.4	5.4	5.2	5.2	4.8
130	7.4	6.4	6.0	7.8	7.0	6.2	6.4	6.4	5.4	5.2	5.2	4.8
135	7.2	6.4	6.0	7.4	6.8	6.2	6.4	6.2	5.4	5.0	5.0	4.8
140	7.0	6.2	6.0	7.0	6.6	6.0	6.4	6.0	5.4	5.0	5.0	4.8
145	6.8	6.2	6.0	6.6	6.4	6.0	6.0	5.8	5.4	4.6	4.6	4.6
150	6.6	6.2	6.0	6.2	6.2	6.0	5.8	5.6	5.4	4.4	4.4	4.4
155	6.4	6.0		5.8	5.8	5.8	5.4	5.4	5.4	4.0	4.0	4.0
160		6.0		5.4	5.4	5.6	5.2	5.2	5.2	3.6	3.6	3.6
165				4.8	4.8	5.2	4.8	4.8	4.8	3.4	3.4	3.4
170				4.4	4.4	4.8	4.6	4.6	4.6	3.0	3.0	3.0
175				4.0	4.0	4.4	4.4	4.4	4.4	2.8	2.8	2.8
180				3.8	3.8	3.8	3.8	3.8	4.0	2.6	2.6	2.6
185				3.6	3.6	3.6	3.4	3.4	3.8	2.2	2.2	2.2
190				3.4	3.4	3.4	3.0	3.0	3.6	2.0	2.0	2.0
195				3.2	3.2		2.6	2.6	3.0	1.8	1.8	1.8
200				3.0	3.0		2.2	2.2	2.6	1.6	1.6	1.6
205				2.8	2.8		1.8	1.8	2.2			
210				2.6			1.4	1.4				
215				2.4								

THIS CHART IS ONLY A GUIDE AND SHOULD NOT BE USED TO OPERATE THE CRANE.
The individual crane's load chart, operating instructions and other instructional plates must be read and understood prior to operating the crane

WORKING RANGE

Working Range - Swingaway with Boom Extension

40.0 ft – 216.5 ft
(12,2 m – 66,0 m)

78,260 lb
(35,5 t)

24.9 ft
(7,6 m)

360°

(Boom deflection not shown)

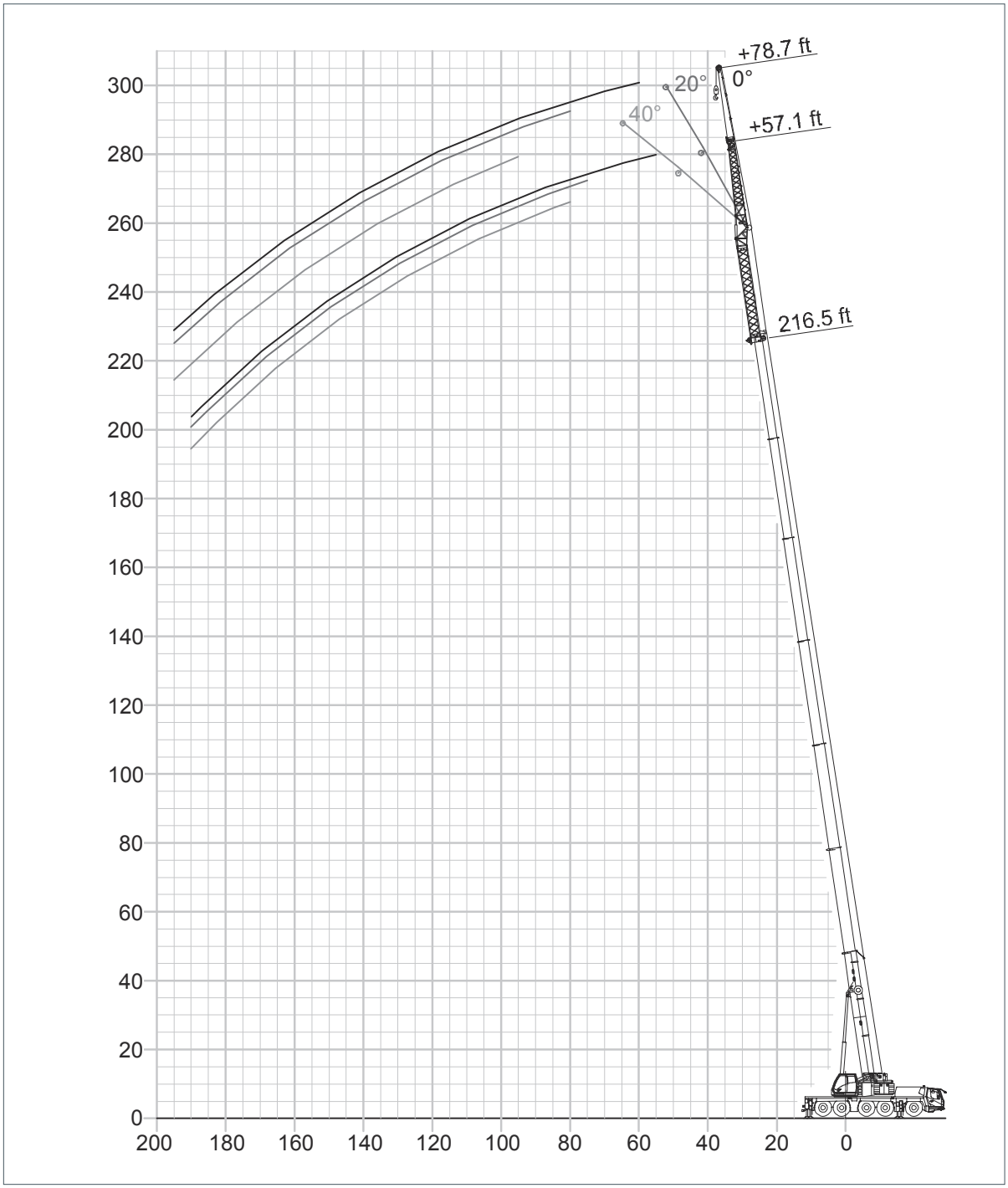

THIS CHART IS ONLY A GUIDE AND SHOULD NOT BE USED TO OPERATE THE CRANE.
The individual crane's load chart, operating instructions and other instructional plates must be read and understood prior to operating the crane

LOAD CHART

Main Boom - Swingaway with Boom Extension

128.3 ft – 216.5 ft (39 m – 66,0 m)

78.7 ft (24 m)

78,200 lb (35,5 t)

24.9 ft (7,6 m)

360°

Pounds

Feet	128.3			178.1–179.3			203.7			216.5		
Feet	78.7			78.7			78.7			78.7		
	0°	* 0° – 20°	* 20° – 40°	0°	* 0° – 20°	* 20° – 40°	0°	* 0° – 20°	* 20° – 40°	0°	* 0° – 20°	* 20° – 40°
35	9.4											
40	9.2											
45	9.0											
50	8.8			6.0								
55	8.6	8.0		6.0			3.8					
60	8.4	7.8		6.0			3.8			3.2		
65	8.2	7.8		6.0			3.8			3.2		
70	8.0	7.4	5.2	5.8			3.8			3.2		
75	8.0	7.2	5.0	5.8	5.6		3.8			3.2		
80	7.8	6.8	5.0	5.8	5.6	3.8	3.8	3.8		3.2	3.2	
85	7.6	6.4	4.8	5.6	5.4	3.8	3.8	3.8		3.2	3.2	
90	7.4	6.2	4.8	5.6	5.4	3.8	3.8	3.8	3.0	3.2	3.2	
95	7.0	6.0	4.6	5.6	5.4	3.8	3.8	3.8	3.0	3.2	3.2	2.6
100	6.6	5.6	4.4	5.4	5.2	3.6	3.8	3.8	2.8	3.2	3.2	2.6
105	6.4	5.4	4.2	5.4	5.2	3.6	3.8	3.8	2.8	3.2	3.2	2.6
110	6.0	5.2	4.2	5.4	5.2	3.6	3.8	3.8	2.8	3.2	3.2	2.6
115	5.8	5.0	4.0	5.4	5.2	3.6	3.8	3.8	2.8	3.2	3.2	2.6
120	5.4	4.8	3.8	5.2	5.0	3.4	3.8	3.8	2.8	3.2	3.2	2.6
125	5.2	4.6	3.8	5.2	5.0	3.4	3.8	3.8	2.8	3.2	3.2	2.6
130	5.0	4.6	3.6	5.2	5.0	3.4	3.8	3.8	2.8	3.2	3.2	2.6
135	4.8	4.4	3.6	5.0	5.0	3.4	3.8	3.8	2.8	3.2	3.2	2.6
140	4.6	4.2	3.4	5.0	4.8	3.4	3.8	3.8	2.6	3.2	3.2	2.4
145	4.4	4.0	3.4	5.0	4.6	3.2	3.8	3.8	2.6	3.2	3.2	2.4
150	4.2	4.0	3.2	5.0	4.6	3.2	3.8	3.8	2.6	3.2	3.2	2.4
155	4.0	3.8	3.2	4.8	4.4	3.2	3.8	3.8	2.6	3.0	3.0	2.4
160	4.0	3.8	3.0	4.6	4.2	3.2	3.8	3.8	2.6	3.0	3.0	2.4
165	3.8	3.6	3.0	4.4	4.2	3.2	3.8	3.8	2.6	2.8	2.8	2.4
170	3.6	3.6	3.0	4.2	4.0	3.2	3.6	3.6	2.6	2.6	2.6	2.4
175	3.6			4.0	4.0	3.2	3.6	3.4	2.6	2.4	2.4	2.4
180	3.4			3.4	3.4	3.2	3.4	3.4	2.6	2.2	2.2	2.2
185	3.4			3.0	3.0	3.0	3.2	3.2	2.6	2.0	2.0	2.0
190	3.2			2.6	2.6	3.0	3.0	3.0	2.6	1.8	1.8	1.8
195	3.2			2.4	2.4	2.6	2.6	2.6	2.6	1.4	1.4	1.4
200				2.2	2.2	2.2	2.2	2.2	2.6			
205				2.4	2.0	2.0	1.8	1.8	2.2			
210				2.2	2.0				1.8			
215				2.4	1.8				1.6			
220				2.2	1.6							
225				2.4								

THIS CHART IS ONLY A GUIDE AND SHOULD NOT BE USED TO OPERATE THE CRANE.
The individual crane's load chart, operating instructions and other instructional plates must be read and understood prior to operating the crane

SPECIFICATIONS

Superstructure

Boom
40.0 ft to 216.5 ft (12,2 m to 66,0 m) seven section TWIN LOCK boom.
Maximum tip height 226 ft (69,0 m).

Boom elevation
1 cylinder with safety valve, boom angle from –1,5° to +83°.

Load moment and independent anti–two block system
Load moment and independent anti–two block system with audio visual warning and control lever lock–out. These systems provide graphic display of boom angle, length, radius, tip height, relative load moment, maximum permissible load, load indication and warning of impending two–block condition with lock–out hoist function.

Cab
Aluminium, full vision, tiltable (approx. 20°), safety glass, adjustable operator's seat with suspension, engine–independent heater. Armrest–integrated crane controls. Ergonomically arranged instrumentation and crane operating controls.

Slewing
2 slewing gears with axial piston motors, planetary gears, automatic break.

Counterweight
78,200 lbs (435.5 tonnes) consisting of various sections [67,700 lbs (30,7 t) within 9 ft (2,75 m) vehicle width].
Hydraulic removal system.

Hydraulic system
2 separate circuits, 1 axial piston variable displacement pump with electronic power limiting control and 1 axial piston variable displacement pump for slewing. Thermostatically controlled oil cooler. Tank capacity: 159 gal (600 l).

Control system
Full electronic control of all crane movements using electrical control levers with automatic reset to zero. Integrated with the RCL and engine management system by CAN–BUS. Crane Control System (CCS) with system with graphic display.

Hoist
Axial piston motor with planetary gear and brake. Drum rotation indicator. IR – Hoist camera.

* Optional equipment

- Bi–fold swingaway – 32 / 52 ft (9,4/ 16,0 m) – with hydraulic offset and luffing under load (0° – 40°), controlled from the crane cab
- 26 ft (8m) boom extention for a maximum total length of 78.7 ft (24 m)
- Auxiliary hoist (in lieu of compensation counterweight)
- Auxiliary boom nose using two parts of line
- Air–conditioning system

SPECIFICATIONS

Carrier

Chassis
Special 5-axle chassis, all-welded torsion-resistant box type construction in high strength steel.

Outriggers
4 double hydraulically telescoping beams with vertical cylinders and outrigger pads. Independent horizontal and vertical movement control on each side of the carrier and from the operators cab. Electronic level indicator with automatic levelling system. Spotlight for each outrigger beam integrated in carrier decking.

Engine
Mercedes Benz OM471LA, diesel, 6 cylinders, water cooled, turbocharged,
522 HP (390 kW) at 1700 rpm (80/1269 EWG fan loose).
Max. torque: 1814 ft lb (2460 Nm) at 1300 rpm.
Fuel tank: 86 + 86 gal (325 l + 325 l).
Engine emission: Euromot 5 / EPA / CARB Tier 4 final (non road).

Transmission
Mercedes G 280-16 gears forward and 2 reverse. 2-stage transfer case with longitudinal differential lock.

Drive/Steer
10 x 6 x 10

Axle lines
5 axle lines, axle lines 1, 2, 3, 4 and 5 steered, axle line 2, 4 and 5 driven.

Suspension
MEGATRAK®. All wheels with independent hydropneumatic suspension and hydraulic lockout. Longitudinal and transverse level control with automatic on highway levelling system. Range +7.7 in / -4.1 in (+195 mm/-105 mm). Active suspension control on outrigger control units.

Tires
10 tires, 385/95 R25 (14.00 R25)

Steering
Dual circuit, hydraulic power assisted steering with emergency steering pump. Axle lines 1, 2, 3, 4 and 5 steer on highway. Separate electronic hydraulic (steer by wire) steering of the 3rd, 4th and 5th axle line for all wheel steering and crabbing.

Brakes
Service brake: pneumatic dual circuit disc brakes acting on all wheels, air dryer. **Permanent brake:** exhaust brake and constant throttle brake. Parking brake: pneumatically operated spring-loaded brake acting on axle lines 2, 3, 4 and 5.

Driver's Cab
Two operator designed, safety glass, driver seat with pneumatic suspension, engine dependent hot water heater incl. 24 h timer. Complete instrumentation and driving controls. Air conditioning. 12 V plug. Fire extinguisher.

Electrical system
Three-phase alternator 28 V/150A, 2 batteries 12 V/180 Ah.
Lighting system and signals 24 V.

* Optional equipment
- 10 x 8 x 10
- 10 tires, size 445/95 R25 (16.00 R25) – Vehicle width 9 ft (2,75 m)
- 10 tires, size 525/80 R25 (20.5 R25) – Vehicle width 9.45 ft (2,88 m)
- MAXbase variable outrigger positioning
- Secondary water retarder
- Reverse camera system

* Other optional equipment on request

SYMBOLS GLOSSARY

Axles

Counterweight

Main hoist

Outriggers

Axle load

Crane functions

Auxiliary hoist

Radius

Boom

Crane travel

Hookblock/Capacity

Slewing/Working range

Boom elevation

Drive/Steer

Hydraulic system

Speed

Boom telescoping

Electrical system

Lattice extension

Suspension

Brakes

Engine

Lattice extension

Transmission/Gear

Cab

Free on wheels

Luffing jib

mph Travel speed

Carrier frame

Gradeability

Low range

Tires

The Manitowoc Company, Inc.

Regional headquarters

Americas
Milwaukee, Wisconsin, USA
Tel: +1 414 760 4600

Shady Grove, Pennsylvania, USA
Tel: +1 717 597 8121

Europe and Africa
Dardilly, France – TOWERS
Tel: +33 (0) 4 72 18 20 20

Wilhelmshaven, Germany – MOBILE
Tel: +49 (0) 4421 294 0

APAC
Shanghai, China
Tel: +86 21 6457 0066

Singapore
Tel: +65 6264 1188

Middle East and India
Dubai, UAE
Tel: +971 4 8862677

© 2024 The Manitowoc Company, Inc.

Form No. GMK5120L PG
Part No. 24-001/.025M/0124

This document is non-contractual. Constant improvement and engineering progress make it necessary that we reserve the right to make specification, equipment, and price changes without notice. Illustrations shown may include optional equipment and accessories and may not include all standard equipment.

manitowoc.com